LONG NECK

Twist-Off 0.500



KMC GLASS

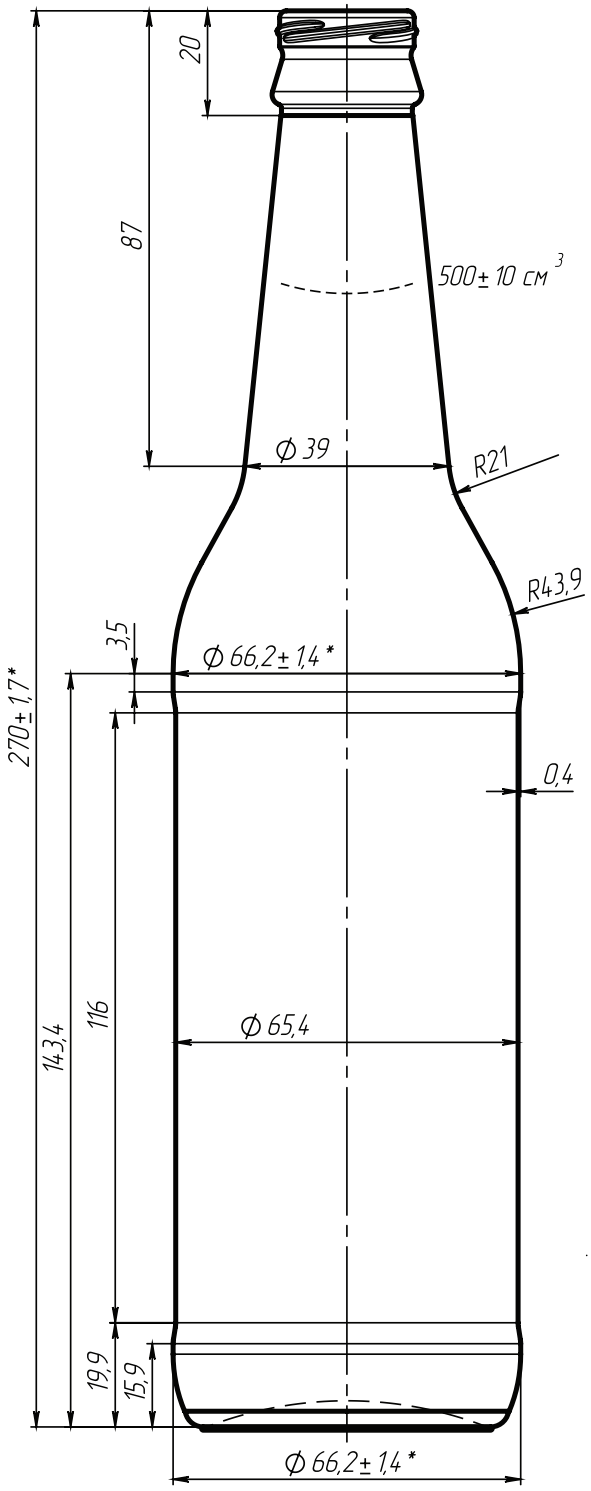

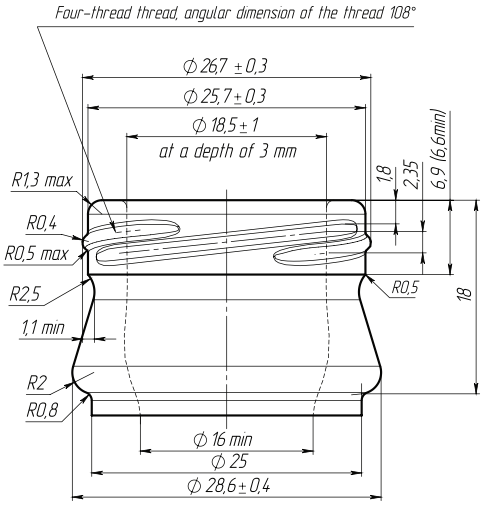

- Long Neck Twist-Off
- Filling CAP - 500 ml
- Weight - 280 g
- Height - 270 mm
- Diameter - 65.4 mm
- Color - Green, Flint, Amber

www.kmc.glass
sales@kmc.glass

KMC GLASS